The New World of

# TEDDY RUXPIN™

THE ORIGINAL ANIMATED TALKING TOY

# TV Video Pack

## For use with Teddy Ruxpin and Teddy Ruxpin Interactive Videos

### Important Message to Parents

Thank you for purchasing a Teddy Ruxpin TV Video Pack. Please take a moment to read these instructions so you can show your child how to use Teddy's Adventure Videos with his TalkBox, safely and properly. Keep this information for future reference. For any questions or problems concerning the operation, care or repair of Teddy Ruxpin and any accessories, please call our toll-free Customer Service Department at: 1-800-222-9376.

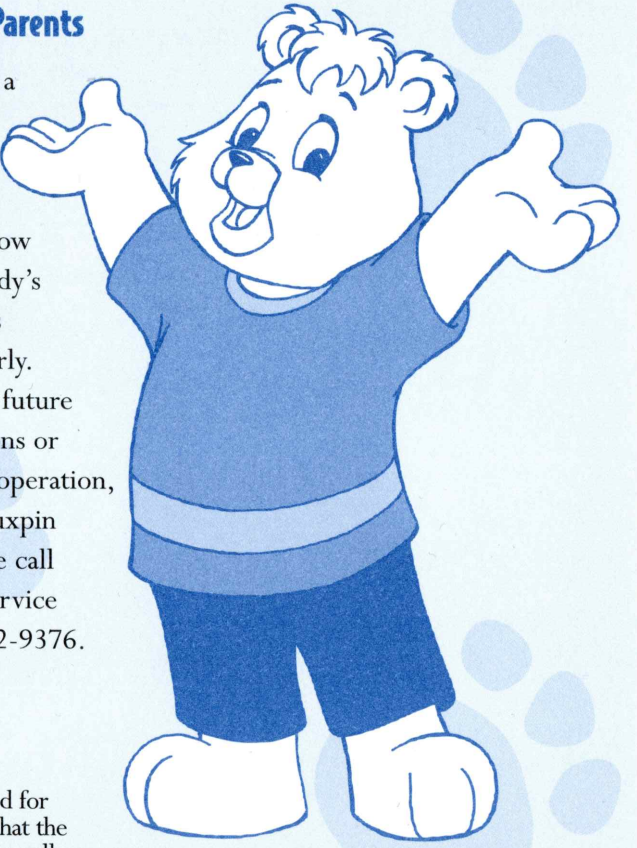

### Caution

Teddy Ruxpin is recommended for children ages 2 and up. Note that the videotape can be unwound by small children causing a possible entanglement hazard. Adult supervision is recommended for videotape use. Contains small parts which may be a choking hazard in younger children.

## SHARE THE FUN WITH TEDDY RUXPIN

Teddy Ruxpin Pack Out. Teddy shares his adventures on audiocassette tapes and storybooks. Your child can select a tape from the library of adventures, and insert into Teddy's special cassette player. No additional components are required.

### Teddy Ruxpin and his TV Video Pack.

**The TV Video Pack allows Teddy Ruxpin to share his adventures with your child on videotape. He narrates and interacts with the video adventure by asking questions, singing, and sharing comments with your child. Special set-up required.**

## PACKAGE CONTENTS

- Teddy Ruxpin® TalkBox
- 2 RCA Video Cables (yellow connectors)
- 2 RCA Audio Cables (red connectors)
- 12' stereo cable for Teddy Ruxpin (black connectors both ends)
- Teddy Ruxpin Interactive Videotape *"The Treasure of Grundo"*
- Teddy Ruxpin Fun Book *"The Treasure of Grundo"*
- Warranty Card

## HOW TO OPERATE - OVERVIEW

It can be lots of fun to watch Teddy's interactive videos with him. Once the TalkBox is connected, simply plug Teddy Ruxpin into his TalkBox, and press the ON/RESET button on the TalkBox. (DO NOT press Play on Teddy.)

### 1. Insert Batteries or use an AC Adapter.

Find the battery door on the bottom of the TalkBox. Remove the battery door by loosening the two screws. Install 6 AA batteries as indicated and as directed on the back of these instructions.

*OPTIONAL -*
You may use an AC adapter instead of batteries. Approved Radio Shack power adapters are model numbers 273-1455D and 273-1662 (a "center negative" power adapter is required). These AC adapters can be purchased directly from Radio Shack. To use a power adapter, connect it to the AC Power Adapter jack on the back of your TalkBox, and plug it in to an outlet. If you are using an AC adapter instead of batteries for an extended time, please remove any batteries to avoid battery leakage and damage to your TalkBox.

### 2. Connect the TalkBox to your TV & VCR as directed.

You must have Audio Out and Video Out connections on your TV, VCR, or Receiver to use the Teddy Ruxpin Talk Box. See the section "Installing the Talk Box" for specific directions. The TalkBox only needs to be set-up once. After it is connected, it can remain connected without affecting your normal music, TV, or Video viewing.

**3. Turn ON the TV and VCR** (and any other equipment you are using).

**4. Connect Teddy Ruxpin to the TalkBox.**
Teddy Ruxpin connects to the TalkBox using the 12' black cable (included). Insert either end of the cable into the Teddy Port on the front of the TalkBox. Then insert the other end of the cable into the Cable Port on Teddy's back. Teddy will ONLY work with an interactive Teddy Ruxpin Adventure video or program, and ONLY when connected to his TalkBox.

**5. Remove Audio Cassette.**
Be sure to remove any cassette tapes from Teddy's back to ensure correct operation.

**6. Start the Teddy Ruxpin Adventure Video.**
Insert a Teddy Ruxpin interactive videotape into the VCR and press PLAY
OR
Turn on a Teddy Ruxpin interactive television program. Be sure to use your VCR or cable converter box to select the channel airing the program. (If you select the channel using the TV directly, Teddy Ruxpin may not animate or produce sound, and the green light on the TalkBox would be off.) See "Installing the TalkBox" for more information.

**7. Turn ON Teddy's TalkBox.**
Press the ON/RESET button on the front of the TalkBox. The red light will come on to show the TalkBox is on and has power. If the TalkBox is connected correctly, and an interactive video or TV program is playing, a green light will come on in the TalkBox window. If the batteries are becoming weak, the red light will grow dim and eventually disappear (the red light will also disappear when the unit turns itself off, see #10). The green light on the TalkBox may flicker when the batteries are low. Also, Teddy's voice and animation may not work correctly when the batteries are weak.

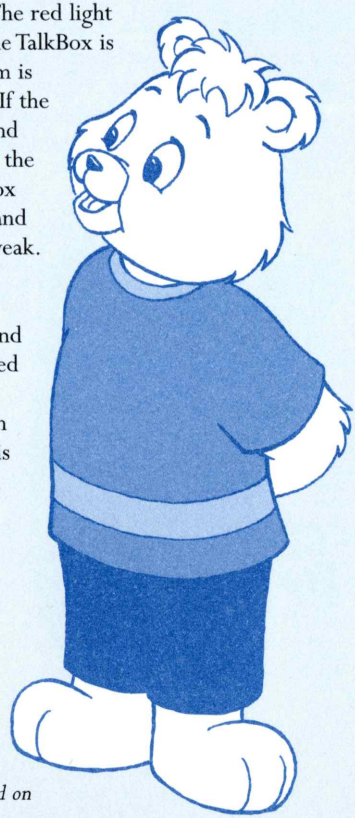

**8. Teddy Ruxpin Comes Alive!**
This is where Teddy comes alive! If Teddy doesn't animate and produce sound, then make sure that the TalkBox is connected correctly (see "Installing the TalkBox"), that Teddy is connected to the TalkBox (see #4), and that a Teddy Ruxpin interactive video or program is being played. If everything is correct and the green light is on in the TalkBox, then check Teddy's batteries. If Teddy's batteries are low, then he will not animate properly, and may not produce sound.

**9. Adjust Teddy's volume level as needed. Enjoy the show!**

**10. After play, the TalkBox will shut off automatically.**
The TalkBox will shut off after thirty seconds if there is no video signal. It will wait up to 5 minutes if there is no interactive signal.

*For your convenience, a quick reference version of this section is printed on the bottom of the TalkBox.*

# INSTALLING THE TALKBOX

The TalkBox acts as an interpreter. It sends signals from the encoded videotapes to Teddy Ruxpin. The TalkBox only needs to be installed once. After it is connected, it can remain connected without affecting the normal use of your TV, VCR or Stereo.

TVand VCR connections vary. Install the TalkBox by following the instructions for your configuration.

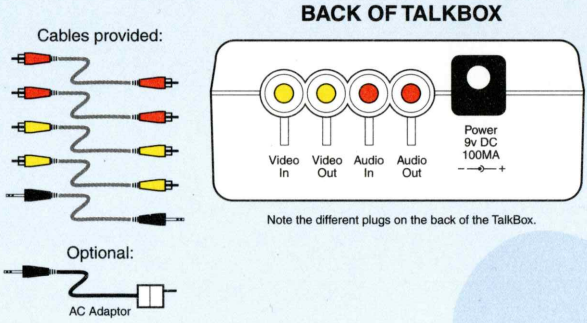


## Recommended Set-Up

For the best experience with your Teddy Ruxpin Interactive video, a stereo TV and stereo VCR are required. Follow the "Separate Video/Audio Connections" instructions. In this set-up you will always hear the video (cartoon) sound track on the LEFT speaker of your TV (or Receiver). Teddy's narration will only come from Teddy.

## Newer Televisions

If you have a TV with separate Video and Audio outputs, then you can connect your TalkBox to your TV instead of your VCR. Simply follow the "Separate Video/Audio Conections" instructions. The VCR in the instructions will represent your television. By connecting your TalkBox to your TV, you will be able to use your TV, VCR, or TV Converter Box to tune into a Teddy Ruxpin Interactive Program.

*Note that you may not need to use all the provided cables, because you can use the existing cables on your current set-up. If the existing cables are not long enough, or do not fit into the TalkBox jacks, you may remove them and use the ones provided.*

## Other Set-Up Possibilities

Other set-ups are also possible, but may change the orientation of the sound tracks. If you have a cable box, it can be connected anywhere before the TV, (usually before the VCR). Anything that is connected into the TalkBox can be used to supply a signal to the TalkBox. Note that if you have a TV/VCR combination set, it must have a VIDEO OUT and AUDIO OUT to work with your TalkBox. In that case you will install the TalkBox in a single RF configuration.

# SEPARATE VIDEO/AUDIO CONNECTIONS

## If your VCR and TV (or receiver) are connected as shown below...

Two or three cables connect the VCR to the TV or Receiver

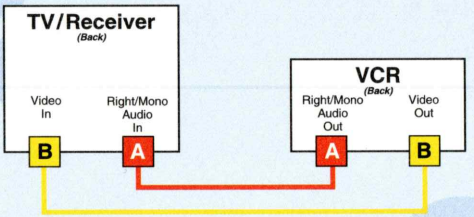


*There may also be a white cable connected between the TV (Left Audio In) and VCR (Left Audio Out). This connection does not need to be changed.*

## ...then install the TalkBox as shown below:

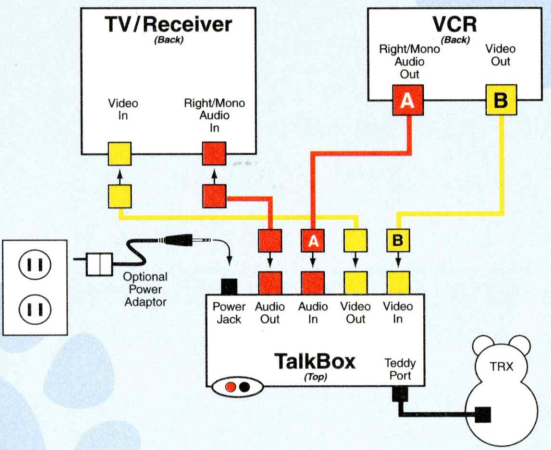


NOTE: There may also be additional connections and cables that are not shown here. These connections do not need to be changed.

- (A) RIGHT/MONO AUDIO CABLE (red plug) between the VCR and the TV (or Receiver): Keep one end plugged into the VCR's RIGHT/MONO AUDIO OUT jack. Remove the other end from the TV (or Receiver) and insert into the TalkBox AUDIO IN jack.
- (B)VIDEO CABLE (yellow plug) between the VCR and the TV (or Receiver): Keep one end plugged into the VCR's VIDEO OUT jack. Remove other end from the TV (or Receiver) and plug it into the TalkBox VIDEO IN jack.
- Plug one of the provided AUDIO CABLES (red ends) into the TalkBox AUDIO OUT jack. Connect the other end of the AUDIO CABLE to the RIGHT/MONO AUDIO IN jack of the TV (or Receiver).
- Plug one of the provided VIDEO CABLES (yellow ends) into the TalkBox VIDEO OUT jack. Connect the other end of the VIDEO CABLE to the VIDEO IN jack of your TV (or Receiver).

***If everything is properly connected and you have a Stereo VCR, you will hear the cartoon out of the LEFT speaker on your TV/Receiver and Teddy's voice out of Teddy.***
***If you have a Mono VCR, you will hear everything from Teddy only.***

# SINGLE RF CONNECTION

## Not optimal, but will function well.

### If your TV and VCR are connected as shown below...

One cable connects the VCR to the TV

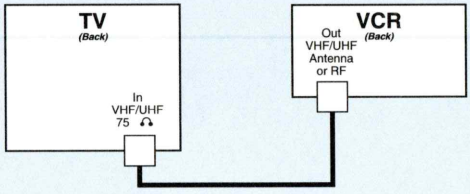


### ...then install the TalkBox as shown below:

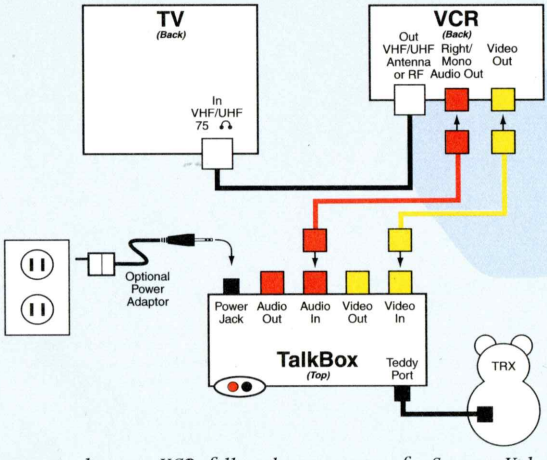


*If you have a Receiver connected to your VCR, follow the instructions for Separate Video/Audio Connection. (Even if your Receiver does not have a video connection.)*

NOTE: You may have additional connections and cables that are not shown here. Those connections do not need to be changed. (RF cable between TV and VCR remains the same.)

- Plug one of the provided AUDIO CABLES (red ends) into the TalkBox AUDIO IN jack. Connect the other end of the AUDIO CABLE to the RIGHT/MONO AUDIO OUT jack of your VCR.
- Plug one of the provided VIDEO CABLES (yellow ends) into the TalkBox VIDEO IN jack. Connect the other end of the VIDEO CABLE to the VIDEO OUT jack of your VCR.

***With this set-up, you will hear both the cartoon video sound track AND Teddy's narration out of your TV. If you have two audio connections (Left and Right) on your VCR, then you will hear only Teddy's narration from Teddy. If you have only one audio connection on your VCR (Mono), you will hear the same thing out of Teddy that you hear from your TV.***

## TUNING IN TEDDY RUXPIN TELEVISION PROGRAMS

Teddy will soon have Interactive Television Programs that you can tune into. For Teddy to interact with these programs, you must use your VCR (or any equipment connected to the inputs of your VCR) to tune into the program. If you installed the TalkBox using the "Newer Television" option, you may also tune into a Teddy Ruxpin Interactive program directly by using your TV.

## TROUBLE SHOOTING

- **The videotape or program is playing and the show is on, but Teddy Ruxpin is silent:**
  - Make sure that the videotape or program is Teddy Ruxpin Interactive.
  - Check that the black cable is properly connected between Teddy and his TalkBox.
  - Reset the TalkBox by pressing the red ON/RESET button.
  - Confirm that the TalkBox's red power indicator is lit. If not, check that the AC adapter is properly connected, or that the batteries are fresh and in good condition. Note that as the batteries become weak, the red LED will get dim and then go out.
  - Confirm that the TalkBox's green light is on.
    - If the green light is on, check that Teddy's batteries are fresh.
    - If the TalkBox's green light is off and the show is interactive, then try adjusting the tracking on your VCR.
  - If Teddy Ruxpin is still silent, check that the TalkBox is properly installed.
- **You hear static when Teddy Ruxpin is on:**
  - Make sure that Teddy Ruxpin's and his TalkBox's batteries are fresh.
  - Be sure that all cables are firmly plugged in.
- **The videotape is playing, but the picture does not show on the television:**
  - Make sure that the TV and VCR are both on and that the VCR is in PLAY mode.
  - Check that the cable connections are secure and that the TalkBox is installed properly.
  - Confirm that the VCR is set to SP mode. If needed, adjust the VCR's tracking.

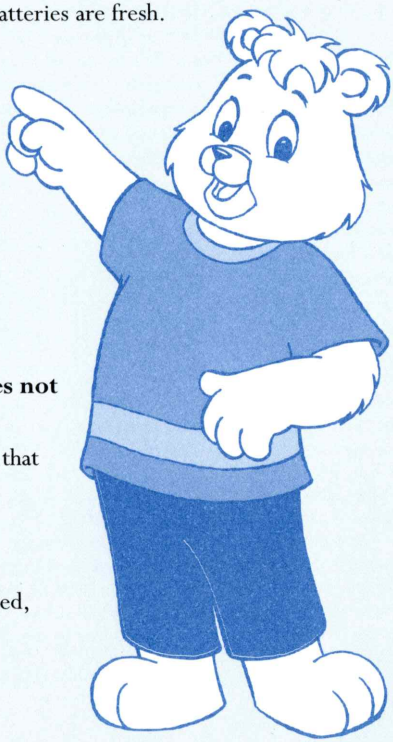

# Look for these other Teddy Ruxpin products!

### Teddy Ruxpin Book and Tape Adventures
(sold separately)

The Day Teddy Met Grubby
Summertime
Autumn Adventure
Quiet Please
Lullabies
The Sign of a Friend
Uncle Grubby
The Wooly What's-It
All About Bears
The Do-Along Song Book
Teddy's Winter Adventure
Teddy's Christmas

### Teddy Ruxpin Interactive Videotapes and Activity Books
(sold separately)

Guests of the Grunges
Escape from the Treacherous Mountains
Take a Good Look
Grubby's Romance
Come Dream with me Tonight
Tweeg Gets the Tweezles

## BATTERY REPLACEMENT

**Duracell is the official battery for Teddy Ruxpin.** Batteries should always be replaced by an adult. To open, loosen screws on the battery door on the back of Teddy Ruxpin's TalkBox. Remove old or exhausted batteries from the toy and dispose of them safely. Replace all batteries at the same time. Insert six new 1.5 (⎓) volt AA ALKALINE batteries as indicated inside the battery compartment (- + - +- +). Replace with Alkaline batteries for better performance and longer battery life. Do not mix alkaline, standard (carbon-zinc), or rechargeable (nickel-cadmium) batteries. Do not mix new and used batteries, or different battery brands/types together. Do not use rechargeable batteries. Do not attempt to recharge non-rechargeable type batteries. Batteries must be inserted with the correct polarity. Do not short circuit battery contacts. Remove batteries before extended storage. Reinsert tabs on the battery door and secure with the screws. Do not allow child to use unless battery door is secured. Batteries are small objects and can be ingested.

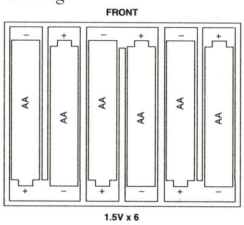


## 90 Day Limited Warranty

This product comes with a ninety-day LIMITED WARRANTY, the terms of which are described in the warranty card included with the product. If you experience any difficulties with your Teddy Ruxpin or TalkBox, please contact YES! Entertainment Corporation's Customer Service Department at 1-800-222-9376 Monday through Friday, 8:00 AM to 5:00 PM Pacific time.

## WARNING:

Changes or modification to the product not expressly approved in writing by YES! Entertainment Corporation may void the user's authority to operate this product.

## NOTE:

This equipment has been tested and found to comply with the limits for a Class B digital device, pursuant to Part 15 of the FCC Rules. These limits are designed to provide reasonable protection against harmful interference in a residential installation. This equipment generates, uses, and can radiate radio frequency energy and, if not installed and used in accordance with the instructions, may cause harmful interference to radio communications. However, there is no guarantee that interference will not occur in a particular installation. If this equipment does cause harmful interference to radio or television reception, which can be determined by turning the equipment off and on, the user is encouraged to try to correct the interference by one or more of the following measures: Reorient or relocate the receiving antenna. Increase the separation between the equipment and the receiver. Consult the dealer or an experienced radio TV technician for help.

**Conforms to the Safety Requirements of ASTM F963. Printed in China**

U.S. Patent No. 4,846,693, No. 4,786,967, and No. 4,875,096. Technology © Shoot the Moon Products, Inc. All Rights Reserved. YES! Entertainment Corporation is the exclusive licensee, manufacturer and distributor of THE NEW WORLD OF TEDDY RUXPIN toys. TEDDY RUXPIN is a registered trademark, and THE NEW WORLD OF TEDDY RUXPIN and all character names are trademarks of Alchemy II, Inc. Canoga Park, CA. © 1998 Alchemy II, Inc. and YES! Entertainment Corporation. All Rights Reserved. YES! is a registered trademark of YES! Entertainment Corporation. 3875 Hopyard Road, Pleasanton, CA 94588. 1-800-222-9376. www.yesent.com

Teddy Ruxpin TV Video SKU # 990077
Teddy Ruxpin Video C&I Part # 999780